1978

EKO

ELECTRIC SCHEMATIC

ORGAN Mod. RAINBOW SYNTH'S

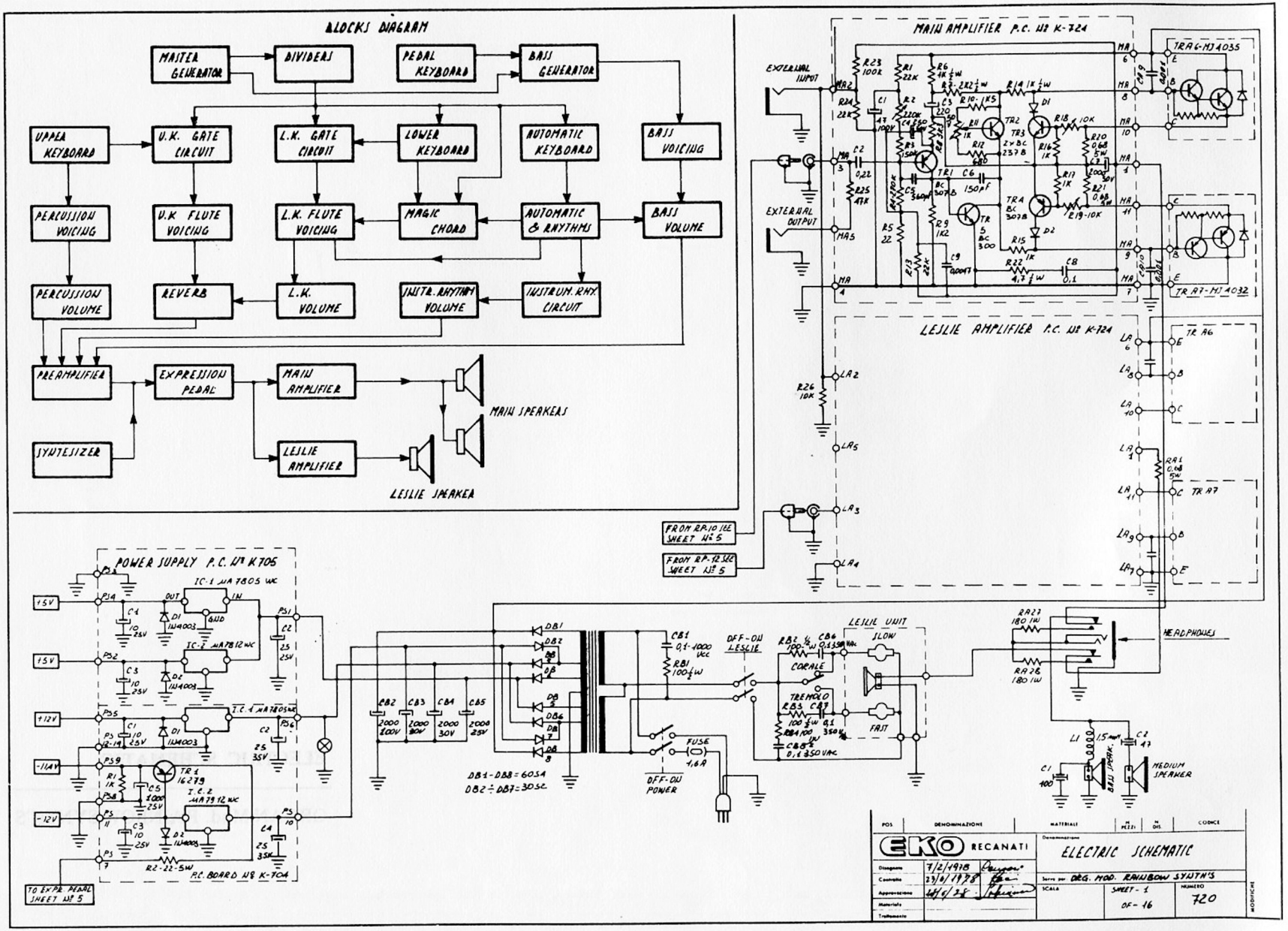
BLOCKS DIAGRAM
MASTER GENERATOR
DIVIDERS
PEDAL KEYBOARD
BASS GENERATOR
UPPER KEYBOARD
U.K. GATE CIRCUIT
L.K. GATE CIRCUIT
LOWER KEYBOARD
AUTOMATIC KEYBOARD
BASS VOICING
PERCUSSION VOICING
U.K FLUTE VOICING
L.K. FLUTE VOICING
MAGIC CHORD
AUTOMATIC & RHYTHMS
BASS VOLUME
PERCUSSION VOLUME
REVERB
L.K. VOLUME
INSTR. RHYTHM VOLUME
INSTRUM. RHY. CIRCUIT
PREAMPLIFIER
EXPRESSION PEDAL
MAIN AMPLIFIER
MAIN SPEAKERS
SYNTESIZER
LESLIE AMPLIFIER
LESLIE SPEAKER
MAIN AMPLIFIER P.C. Nº K-724
EXTERNAL INPUT
EXTERNAL OUTPUT
TR A6-MJ4035
TR A7-MJ4032
LESLIE AMPLIFIER P.C. Nº K-724
TR A6
TR A7
FROM RP-10 SEE SHEET Nº 5
FROM RP-12 SEE SHEET Nº 5
POWER SUPPLY P.C. Nº K705
IC-1 μA7805 WC
IC-2 μA7812 WC
I.C.-1 μA7805 WC
I.C.-2 μA7912 WC
TR 1 16279
P.C. BOARD Nº K-704
TO EXPR. PEDAL SHEET Nº 5
DB1-DB8 = 60SA
DB2 ÷ DB7 = 30SC
OFF-ON LESLIE
OFF-ON POWER
FUSE 1,6A
LESLIE UNIT
SLOW
FAST
CORALE
TREMOLO
HEADPHONES
BASS SPEAK.
MEDIUM SPEAKER
POS
DENOMINAZIONE
MATERIALI
N. PEZZI
N. DIS.
CODICE
EKO RECANATI
Disegnato 7/2/1978
Controllo 23/6/1978
Approvazione 28/6/78
Materiale
Trattamento
Denominazione
ELECTRIC SCHEMATIC
Serve per DRG. MOD. RAINBOW SYNTH'S
SCALA
SHEET - 1 OF - 16
NUMERO 720
MODIFICHE

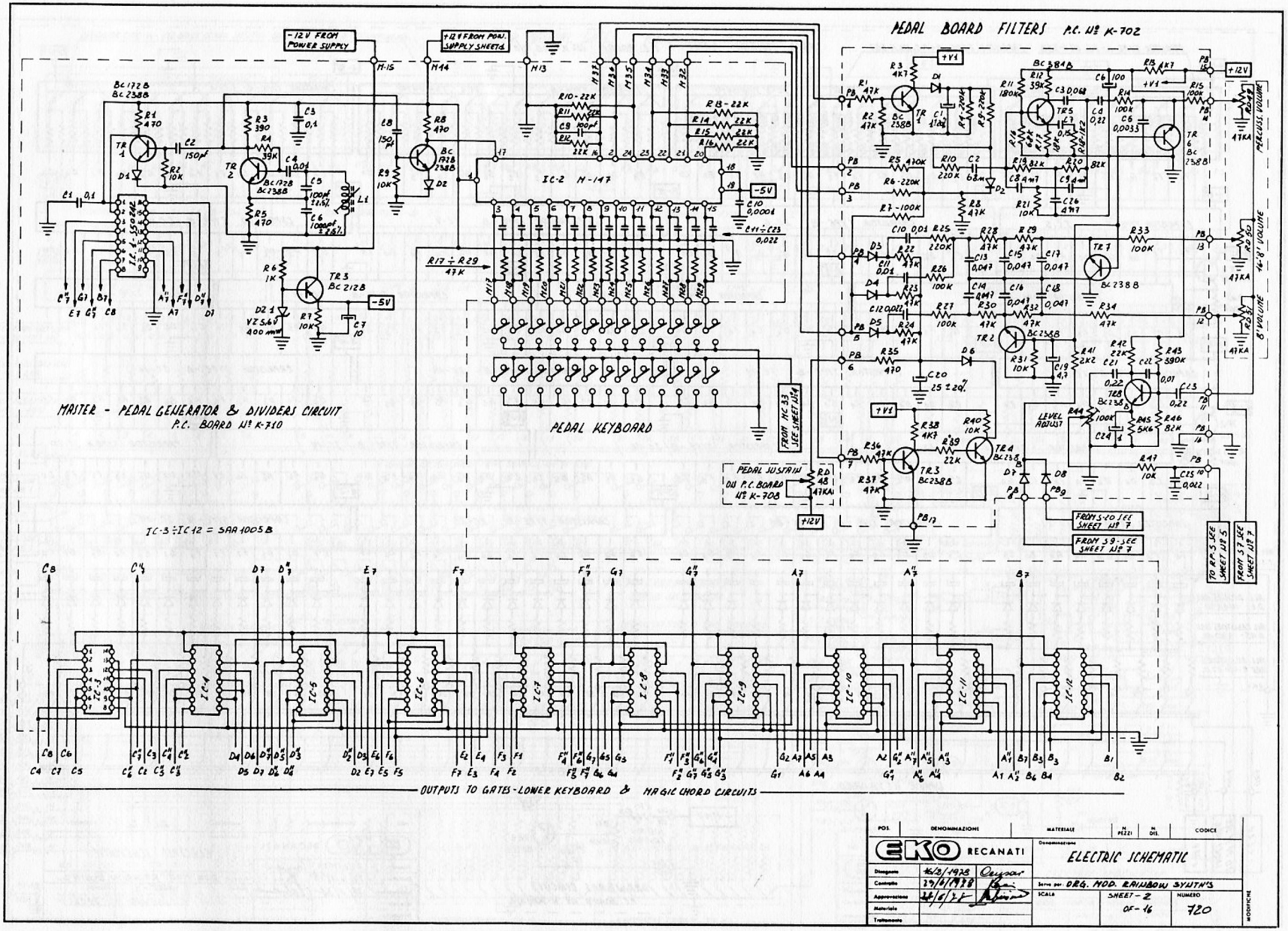
PEDAL BOARD FILTERS P.C. Nº K-702
-12 V FROM POWER SUPPLY
+12 V FROM POW. SUPPLY SHEET 6
MASTER - PEDAL GENERATOR & DIVIDERS CIRCUIT
P.C. BOARD Nº K-710
IC-2 M-147
PEDAL KEYBOARD
FROM IC 33 SEE SHEET Nº 4
PEDAL SUSTAIN ON P.C. BOARD Nº K-708
IC-3 ÷ IC 12 = SAA 1005 B
FROM 5-20 SEE SHEET Nº 7
FROM 39 SEE SHEET Nº 7
TO R.P.S. SEE SHEET Nº 5
FROM 37 SEE SHEET Nº 7
PERCUSS. VOLUME
16'-8' VOLUME
8' VOLUME
LEVEL ADJUST
OUTPUTS TO GATES - LOWER KEYBOARD & MAGIC CHORD CIRCUITS

POS.	DENOMINAZIONE	MATERIALE	Nº PEZZI	Nº DIS.	CODICE
EKO RECANATI					
Disegnato	16/2/1978	Cesari	Denominazione: ELECTRIC SCHEMATIC		
Controllato	29/6/1978		Serve per: ORG. MOD. RAINBOW SYNTH'S		
Approvazione	22/6/78		SCALE	SHEET - 2 OF - 16	NUMERO 720
Materiale					MODIFICHE
Trattamento					

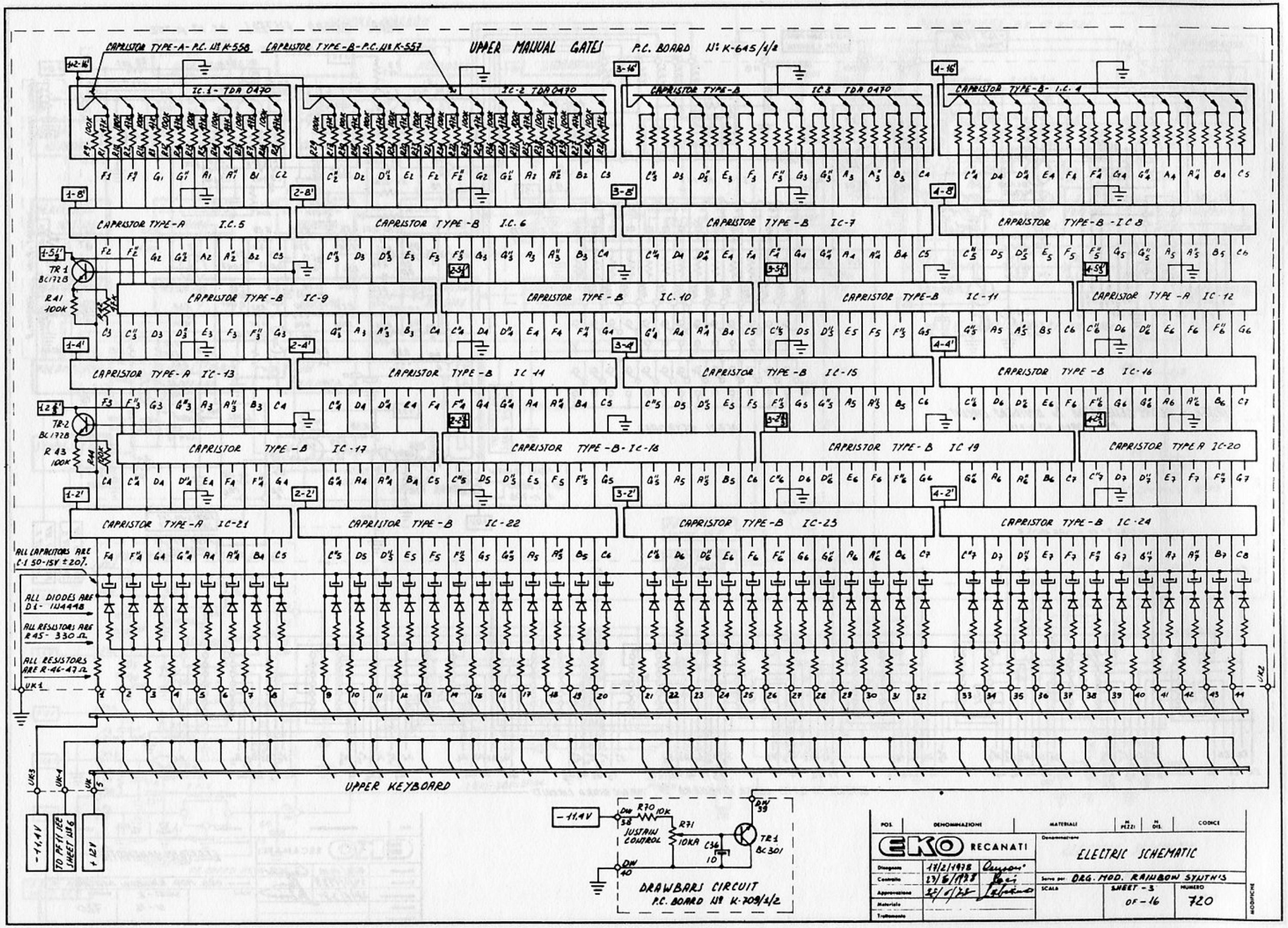
UPPER MANUAL GATES P.C. BOARD N: K-645/1/2
CAPRISTOR TYPE-A- P.C. N° K-558
CAPRISTOR TYPE-B-P.C. N° K-557
IC.1 - TDA 0470
IC.2 TDA 0470
CAPRISTOR TYPE-B IC.3 TDA 0470
CAPRISTOR TYPE-B- I.C. 4
CAPRISTOR TYPE-A I.C.5
CAPRISTOR TYPE-B I.C. 6
CAPRISTOR TYPE-B IC-7
CAPRISTOR TYPE-B -IC 8
TR 1 BC172B
R41 100K
CAPRISTOR TYPE-B IC-9
CAPRISTOR TYPE-B IC. 10
CAPRISTOR TYPE-B IC-11
CAPRISTOR TYPE-A IC-12
CAPRISTOR TYPE-A IC-13
CAPRISTOR TYPE-B IC 14
CAPRISTOR TYPE-B IC-15
CAPRISTOR TYPE-B IC-16
TR-2 BC172B
R 43 100K
CAPRISTOR TYPE-B IC-17
CAPRISTOR TYPE-B-IC-18
CAPRISTOR TYPE-B IC 19
CAPRISTOR TYPE A IC-20
CAPRISTOR TYPE-A IC-21
CAPRISTOR TYPE-B IC-22
CAPRISTOR TYPE-B IC-23
CAPRISTOR TYPE-B IC-24
ALL CAPACITORS ARE C-1 50-15V ±20%
ALL DIODES ARE DI- 1N4448
ALL RESISTORS ARE R45- 330 Ω
ALL RESISTORS ARE R-46-47 Ω
UK-1
UPPER KEYBOARD
UK-3
UK-4
UK-5
- 11,4 V
TO PEDALBOARD UK-6
+ 12 V
- 11,4 V
R70 10K
JUSTAIN CONTROL
R71 10KA
C56 10
TR1 BC 301
DRAWBARS CIRCUIT
P.C. BOARD N° K-709/2/2
EKO RECANATI
ELECTRIC SCHEMATIC
Serve per: ORG. MOD. RAINBOW SYNTH'S
SCALE
SHEET - 3 OF - 16
NUMERO 720

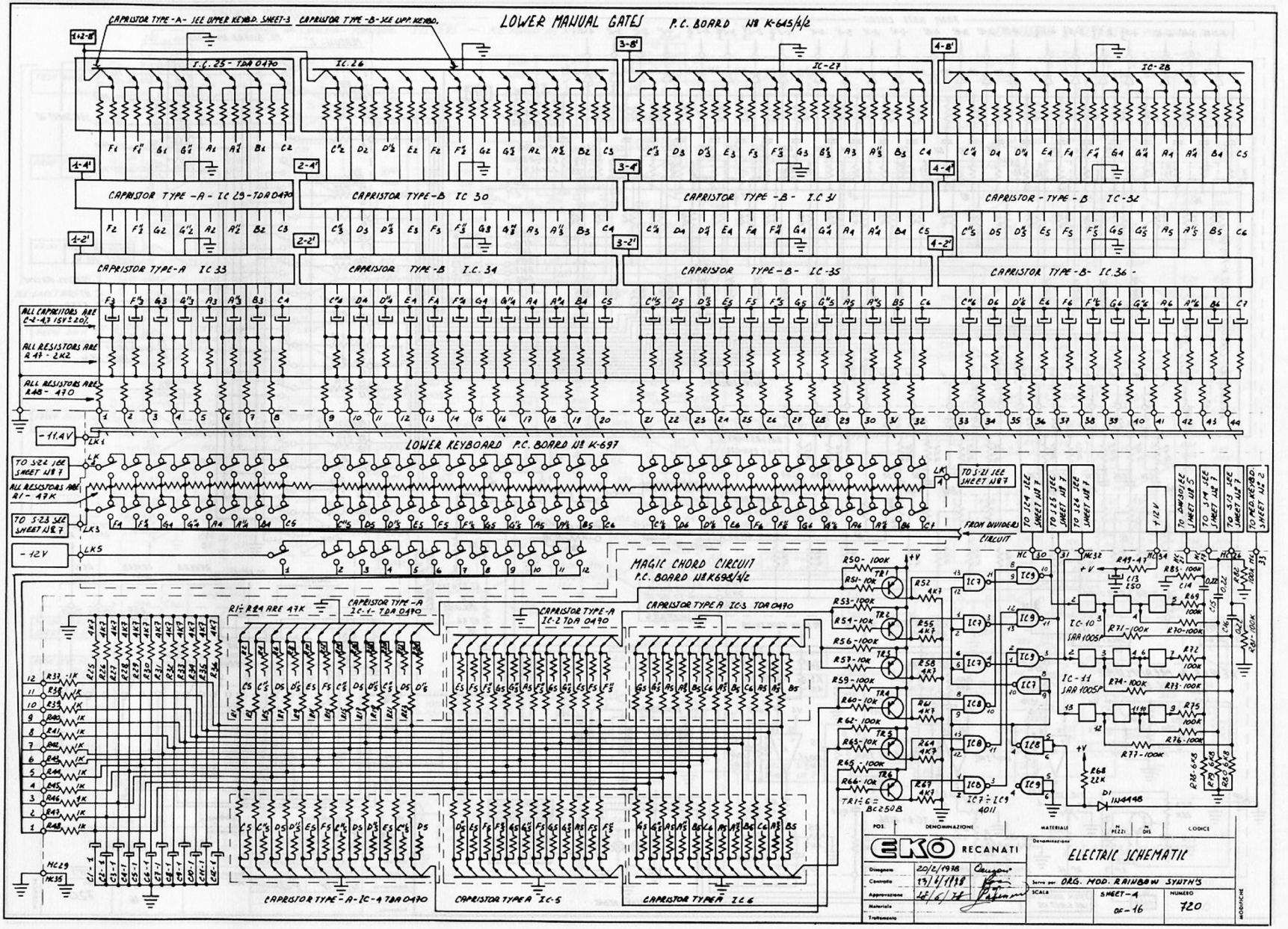
LOWER MANUAL GATES P.C. BOARD Nº K-645/1/2
CAPRISTOR TYPE-A- SEE UPPER KEYBD. SHEET-3
CAPRISTOR TYPE-B-SEE UPP. KEYBD.
I.C. 25 - TDA 0470
IC. 26
IC-27
IC-28
CAPRISTOR TYPE-A - IC 29-TDA 0470
CAPRISTOR TYPE-B IC 30
CAPRISTOR TYPE-B - I.C 31
CAPRISTOR - TYPE - B IC-32
CAPRISTOR TYPE-A IC 33
CAPRISTOR TYPE-B I.C. 34
CAPRISTOR TYPE-B- IC-35
CAPRISTOR TYPE-B- IC.36
ALL CAPACITORS ARE C-2-4,7 15V ± 20%
ALL RESISTORS ARE R 47 - 2K2
ALL RESISTORS ARE R48 - 470
-11.4V
LOWER KEYBOARD P.C. BOARD Nº K-697
TO S-22 SEE SHEET Nº 7
ALL RESISTORS ARE R1 - 47K
TO S-23 SEE SHEET Nº 7
-12V
TO S-21 SEE SHEET Nº 7
FROM DIVIDERS CIRCUIT
TO S24 SEE SHEET Nº 7
TO S25 SEE SHEET Nº 7
TO S26 SEE SHEET Nº 7
+12V
TO DIV30 SEE SHEET Nº 5
TO S14 SEE SHEET Nº 7
TO S13 SEE SHEET Nº 7
TO PED. KEYBD. SHEET Nº 2
MAGIC CHORD CIRCUIT P.C. BOARD Nº K698/1/2
R1÷R24 ARE 47K
CAPRISTOR TYPE-A IC-1- TDA 0470
CAPRISTOR TYPE-A IC-2 TDA 0470
CAPRISTOR TYPE A IC-3 TDA 0470
CAPRISTOR TYPE-A-IC-4 TDA 0470
CAPRISTOR TYPE A IC-5
CAPRISTOR TYPE A IC 6
TR1÷6 = BC250B
IC7÷IC9 4011
IC-10 SAA 1005P
IC-11 SAA 1005P
D1 1N4448
POS.
DENOMINAZIONE
MATERIALE
N. PEZZI
N. DIS.
CODICE
EKO RECANATI
Denominazione
ELECTRIC SCHEMATIC
Disegnato 20/2/1978
Controllo 13/6/1978
Approvazione 28/6/78
Materiale
Trattamento
Serve per ORG. MOD. RAINBOW SYNTH'S
SCALA
SHEET-4 OF-16
NUMERO 720
MODIFICHE

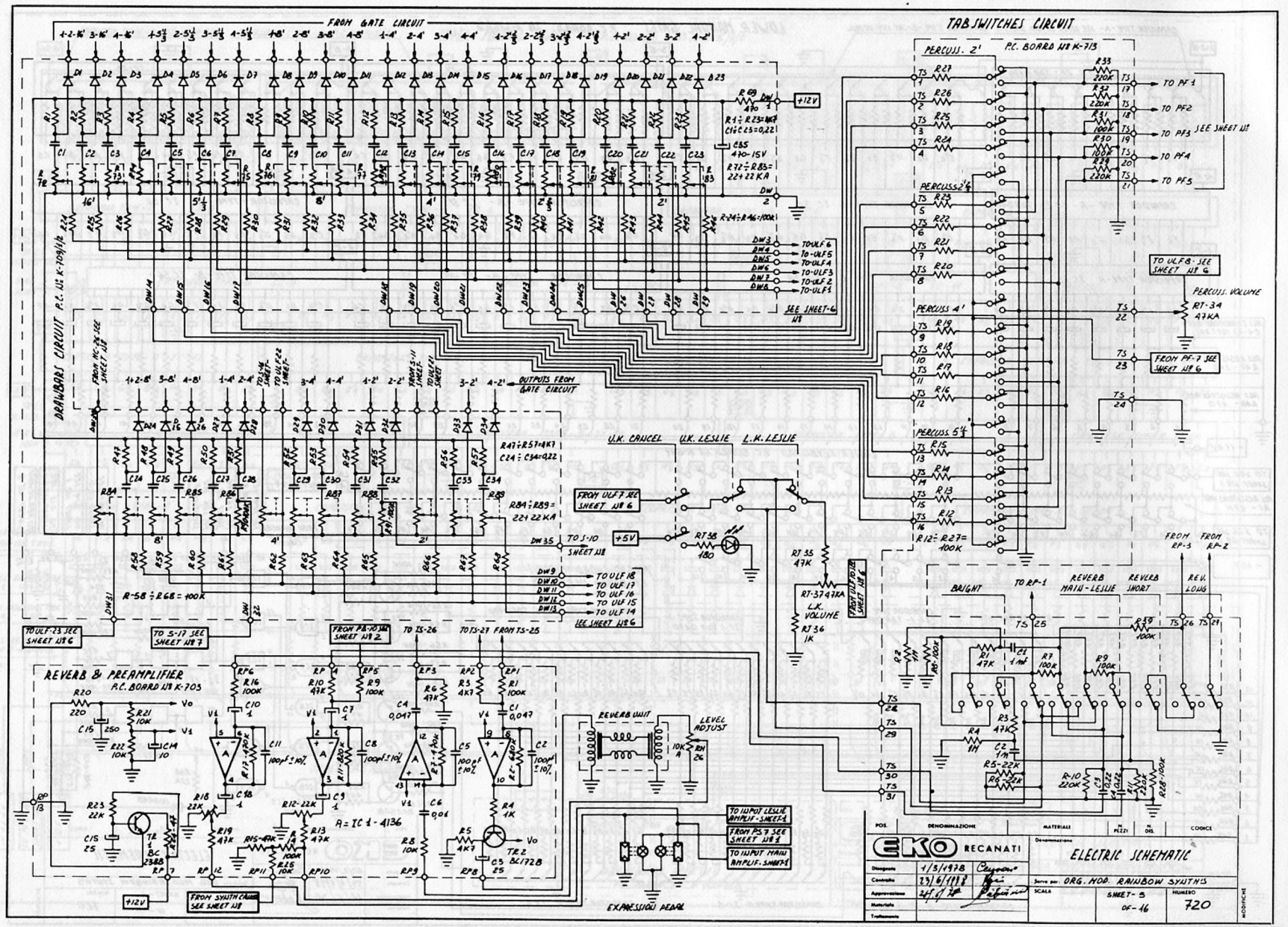
FROM GATE CIRCUIT
TAB SWITCHES CIRCUIT
P.C. BOARD N° K-713
PERCUSS. 2'
PERCUSS 2 1/2
PERCUSS 4'
PERCUSS 5 1/3
TO PF 1
TO PF 2
TO PF 3
TO PF 4
TO PF 5
SEE SHEET N°
TO ULF 8 - SEE SHEET N° 6
PERCUSS. VOLUME
RT-34 47KA
FROM PF-7 SEE SHEET N° 6
DRAWBARS CIRCUIT P.C. N° K-709/1/2
FROM MC-26 SEE SHEET N°
OUTPUTS FROM GATE CIRCUIT
U.K. CANCEL
U.K. LESLIE
L.K. LESLIE
FROM ULF 7 SEE SHEET N° 6
TO S-10 SHEET N°
TO ULF 18
TO ULF 17
TO ULF 16
TO ULF 15
TO ULF 14
SEE SHEET N° 6
TO ULF-23 SEE SHEET N° 6
TO S-17 SEE SHEET N° 7
FROM PB-10 SEE SHEET N° 2
TO TS-26
TO TS-27 FROM TS-25
REVERB & PREAMPLIFIER
P.C. BOARD N° K-703
A = IC 1 - 4136
REVERB UNIT
LEVEL ADJUST
TO INPUT LESLIE AMPLIF. SHEET-1
FROM PS 7 SEE SHEET N° 1
TO INPUT MAIN AMPLIF. SHEET-1
EXPRESSION PEDAL
FROM SYNTH CAUSE SEE SHEET N°
BRIGHT
TO RP-1
REVERB MAIN - LESLIE
REVERB SHORT
REV. LONG
FROM RP-3
FROM RP-2
EKO RECANATI
ELECTRIC SCHEMATIC
Disegnato 1/3/1978
Controllo 23/6/1978
Approvazione
Materiale
Trattamento
Serve per: ORG. MOD. RAINBOW SYNTHS
SCALA
SHEET - 5 OF - 16
NUMERO 720
MODIFICHE

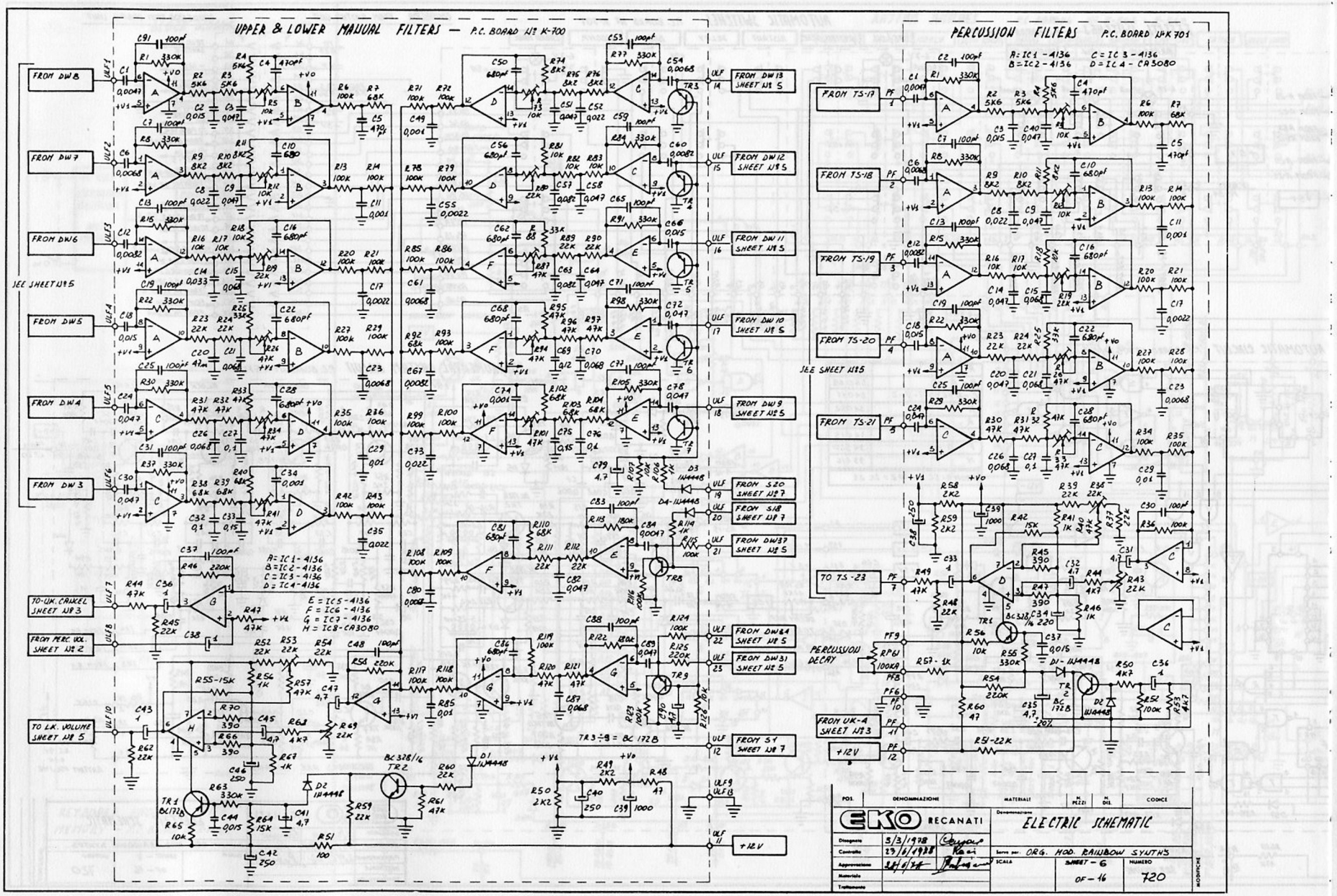
UPPER & LOWER MANUAL FILTERS — P.C. BOARD N° K-700
PERCUSSION FILTERS P.C. BOARD N° K 701
A = IC 1 - 4136
B = IC 2 - 4136
C = IC 3 - 4136
D = IC 4 - CA3080
E = IC 5 - 4136
F = IC 6 - 4136
G = IC 7 - 4136
H = IC 8 - CA3080
FROM DW8
FROM DW7
FROM DW6
FROM DW5
FROM DW4
FROM DW3
SEE SHEET N°5
TO UK. CRIKEL SHEET N°3
FROM PERC. VOL. SHEET N°2
TO LK. VOLUME SHEET N°5
FROM DW13 SHEET N°5
FROM DW12 SHEET N°5
FROM DW11 SHEET N°5
FROM DW10 SHEET N°5
FROM DW9 SHEET N°5
FROM S20 SHEET N°7
FROM S18 SHEET N°7
FROM DW37 SHEET N°5
FROM DW24 SHEET N°5
FROM DW31 SHEET N°5
FROM S9 SHEET N°7
+12V
FROM TS-17
FROM TS-18
FROM TS-19
FROM TS-20
FROM TS-21
TO TS-23
SEE SHEET N°5
PERCUSSION DECAY
FROM UK-A SHEET N°3
+12V
TR3÷8 = BC 172B
ELECTRIC SCHEMATIC
EKO RECANATI
ORG. MOD. RAINBOW SYNTHS
SHEET - 6
OF - 46
NUMERO
720

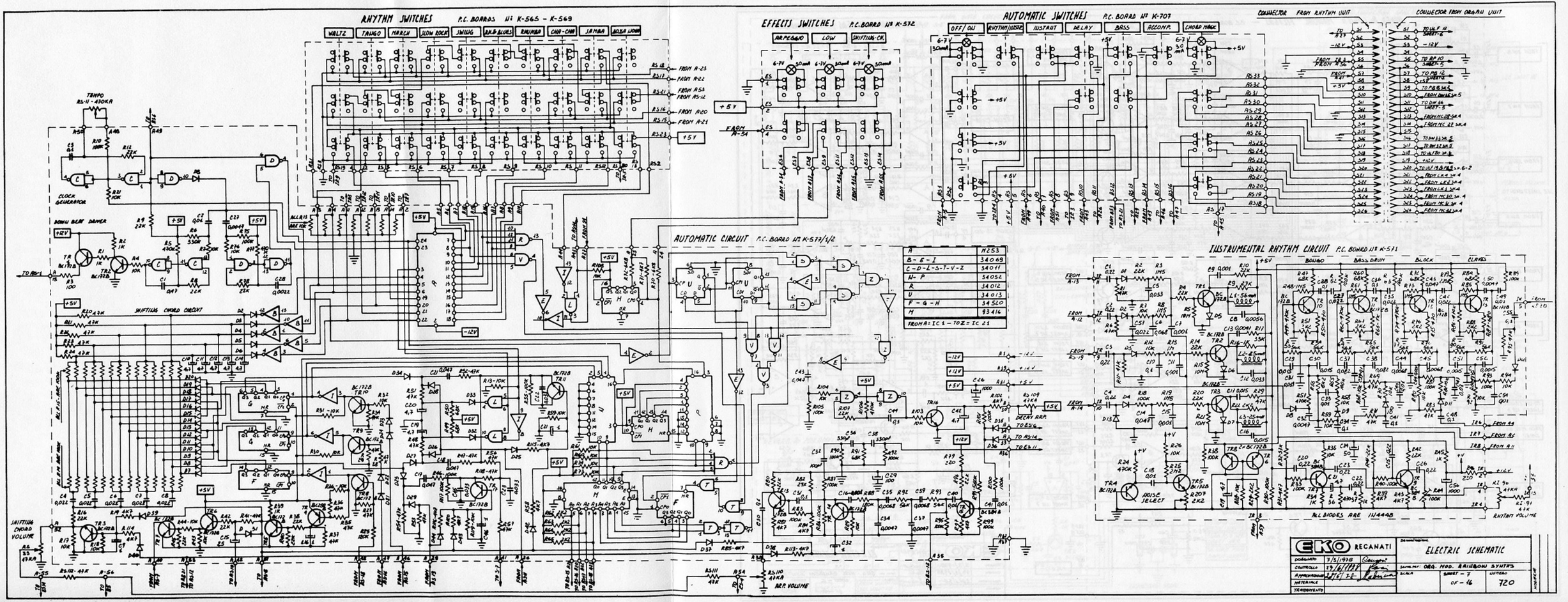

A	M253
B - E - I	34069
C - D - L - S - T - V - Z	34011
W - P	34052
R	34012
U	34013
F - G - H	34520
M	93416
FROM A: IC 1 - TO Z = IC 21	

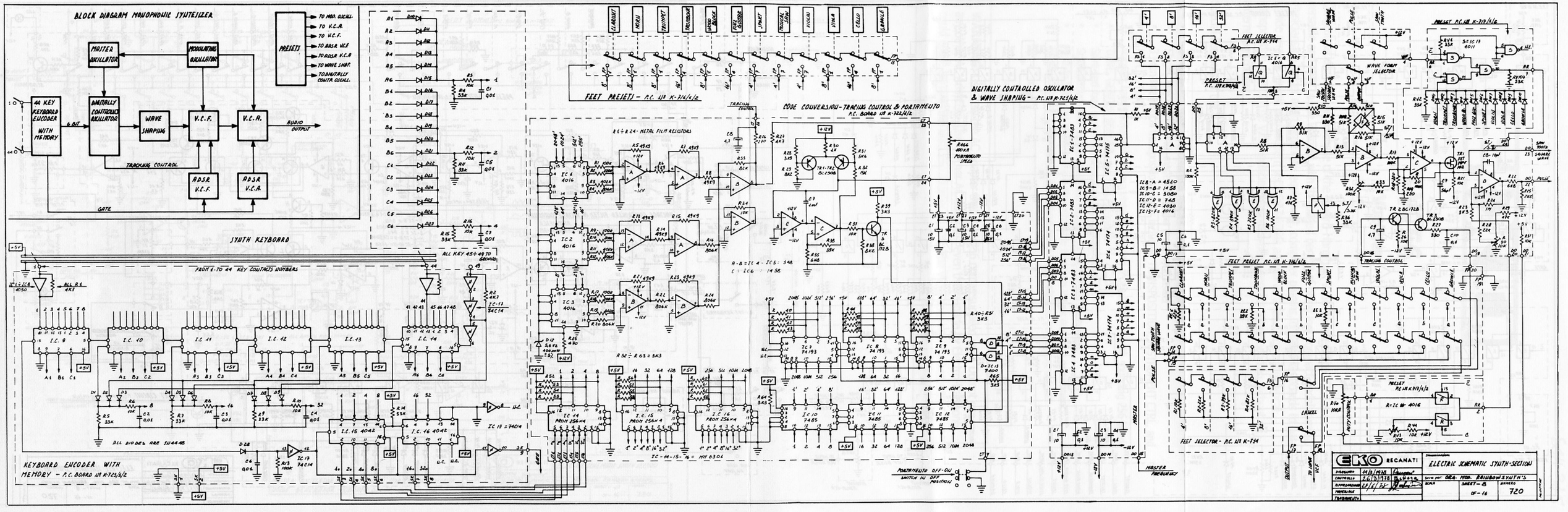
BLOCK DIAGRAM MONOPHONIC SYNTHESIZER
MASTER OSCILLATOR
MODULATING OSCILLATOR
44 KEY KEYBOARD ENCODER WITH MEMORY
6 BIT
DIGITALLY CONTROLLED OSCILLATOR
WAVE SHAPING
V.C.F.
V.C.A.
AUDIO OUTPUT
TRACKING CONTROL
A.D.S.R. V.C.F.
A.D.S.R. V.C.A.
GATE
PRESETS
TO MOD. OSCILL.
TO V.C.A.
TO V.C.F.
TO A.D.S.R. V.C.F.
TO A.D.S.R. V.C.A.
TO WAVE SHAPE
TO DIGITALLY CONTR. OSCILL.
FEET PRESETS - P.C. NR K-316/1/2
CODE CONVERSION - TRACKING CONTROL & PORTAMENTO P.C. BOARD NR K-722/1/2
DIGITALLY CONTROLLED OSCILLATOR & WAVE SHAPING - P.C. NR K-721/1/2
SYNTH KEYBOARD
KEYBOARD ENCODER WITH MEMORY - P.C. BOARD NR K-723/1/2
FEET SELECTOR - P.C. NR K-314
WAVE FORM SELECTOR
MASTER FREQUENCY
ELECTRIC SCHEMATIC SYNTH-SECTION
EKO RECANATI
SHEET - 8
OF - 16
DRAWING NR 720

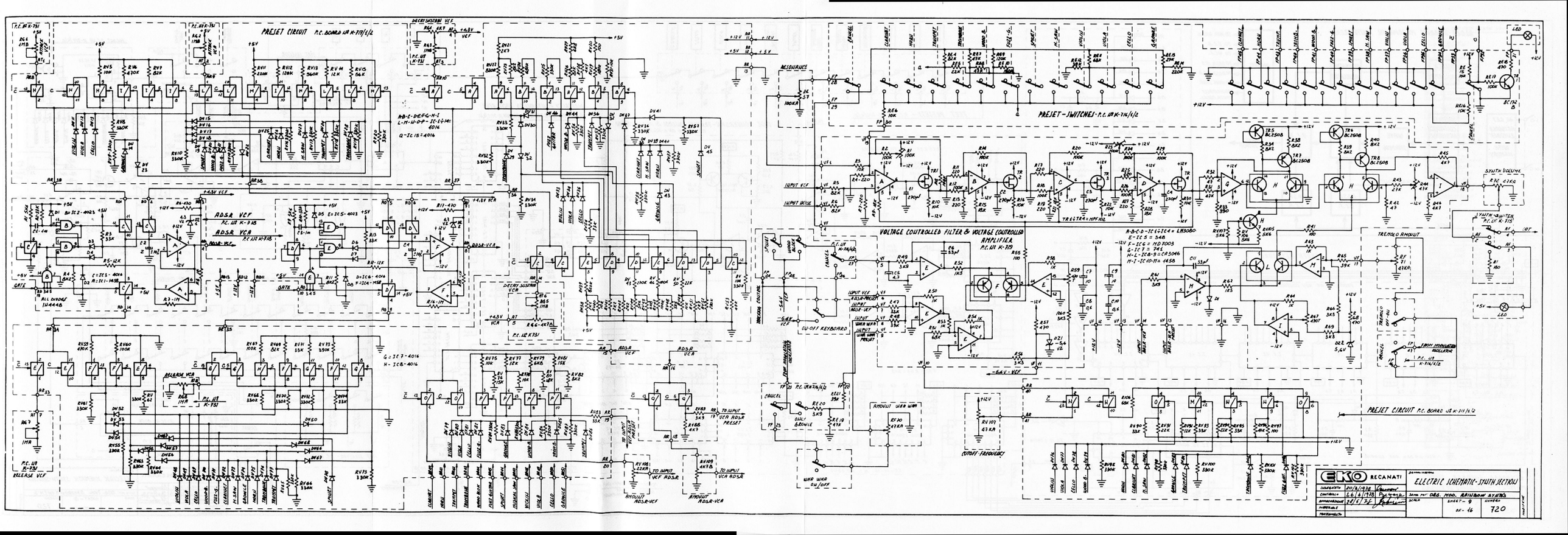
PRESET CIRCUIT P.C. BOARD Nº K-719/1/2
PRESET - SWITCHES - P.C. Nº K-716/1/2
VOLTAGE CONTROLLED FILTER & VOLTAGE CONTROLLED AMPLIFIER P.C. Nº K-719
ADSR VCF
ADSR VCA
RELEASE VCF
DECAY SUSTAIN VCA
RELEASE VCA
TREMOLO AMOUNT
SYNTH VOLUME
SYNTH SWITCH P.C. Nº K-715
CUTOFF FREQUENCY
AMOUNT WHA WHA
WHA WHA ON/OFF
ON-OFF KEYBOARD
TO INPUT VCA ADSR PRESET
TO INPUT VCF ADSR
AMOUNT ADSR-VCF
AMOUNT ADSR-VCA
EKO RECANATI
ELECTRIC SCHEMATIC - SYNTH SECTION
SCALE
SHEET - 9 OF - 16
NUMBER 720

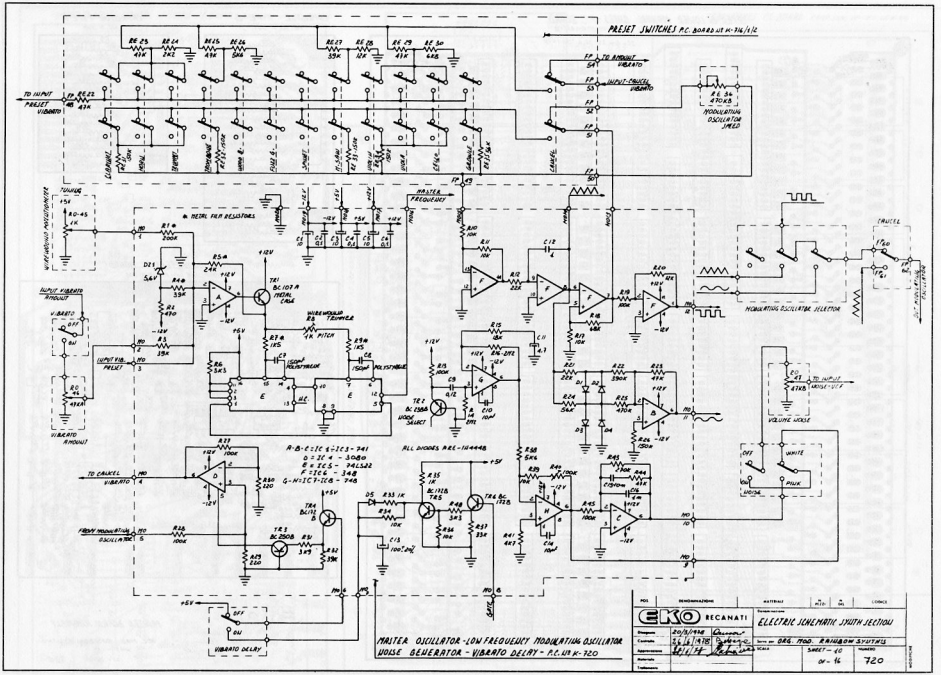
PRESET SWITCHES P.C. BOARD No K-716/1/2
TO INPUT PRESET VIBRATO
TO AMOUNT VIBRATO
INPUT-CANCEL VIBRATO
MODULATING OSCILLATOR SPEED
MASTER FREQUENCY
MODULATING OSCILLATOR SELECTOR
CANCEL
TO INPUT NOISE-VCF
VOLUME NOISE
WHITE
PINK
NOISE
TO CANCEL VIBRATO
FROM MODULATING OSCILLATOR
VIBRATO DELAY
MASTER OSCILLATOR-LOW FREQUENCY MODULATING OSCILLATOR
NOISE GENERATOR-VIBRATO DELAY-P.C. No K-720
EKO RECANATI
ELECTRIC SCHEMATIC SYNTH SECTION
Drawn 20/3/1978
Checked 26/6/1978
Approved 28/6/78
Drawn on ORG. MOD. RAINBOW SYNTHS
SCALE
SHEET - 40 OF - 46
NUMBER 720

UPPER & LOWER MANUAL GATES - P.C. BOARD
SHOWN COMPONENTS SIDE UP - P.C. NO. K-545/1&2

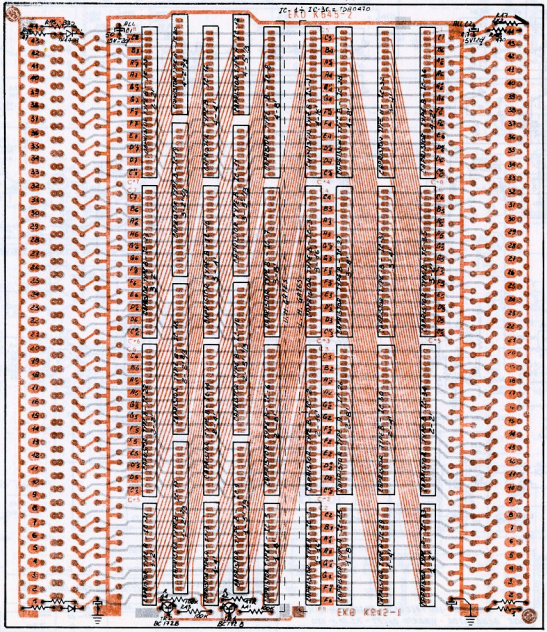

CAPRISTOR TYPE -B-
P.C. NO. K-551

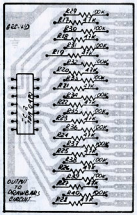

CAPRISTOR TYPE -A-
P.C. NO. K-550

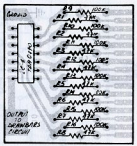

PERCUSSION FILTERS - P.C. BOARD
COMP. SIDE UP - P.C. NO. K-701

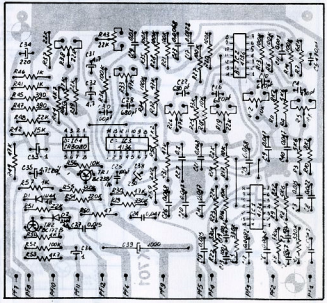

EKO

29/5/1978 Cassinger
29/6/1978 [illegible]
[illegible]

PRINTED BOARDS ASSEMBLY
MEG MOD RAINBOW SYNTH'S
SHEET - 11
OF - 16

720

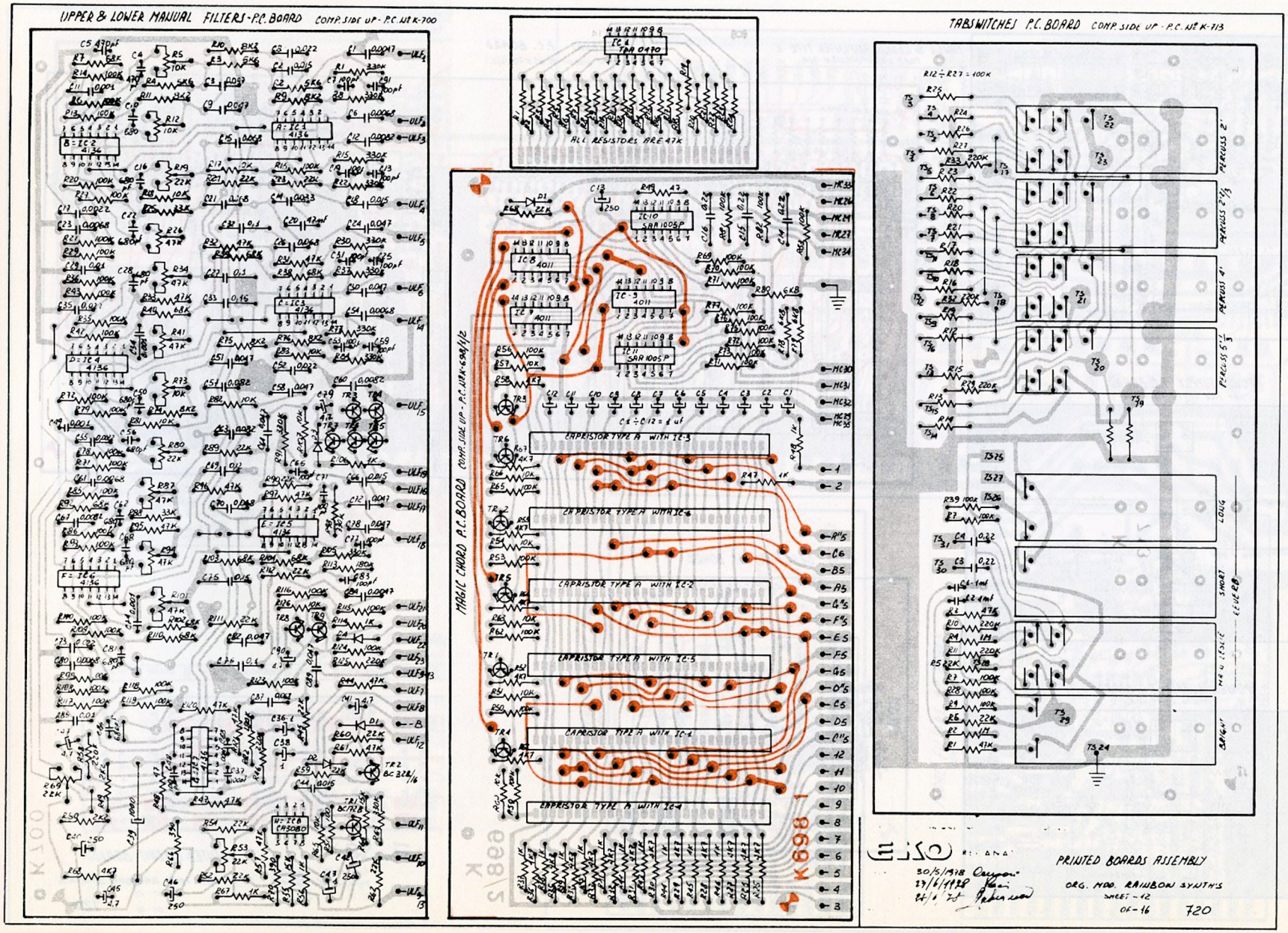
UPPER & LOWER MANUAL FILTERS - P.C. BOARD COMP. SIDE UP - P.C. NR K-700
ALL RESISTORS ARE 47K
MAGIC CHORD P.C. BOARD COMP. SIDE UP - P.C. NR K-698/1/2
CAPACITOR TYPE A WITH IC-3
CAPACITOR TYPE A WITH IC-6
CAPACITOR TYPE A WITH IC-2
CAPACITOR TYPE A WITH IC-5
CAPACITOR TYPE A WITH IC-1
CAPACITOR TYPE A WITH IC-4
K698 1
TABSWITCHES P.C. BOARD COMP. SIDE UP - P.C. NR K-713
R12 ÷ R27 = 100K
PERCUSS 2
PERCUSS 2 1/3
PERCUSS 4'
PERCUSS 5 1/3
LONG
SHORT
BRIGHT
PRINTED BOARDS ASSEMBLY
ORG. MOD. RAINBOW SYNTHS
SHEET -12
OF -16
720

MAIN - PEDAL GENERATOR & DIVIDERS P.C. BOARD
COMP. SIDE UP - P.C. MT K-710

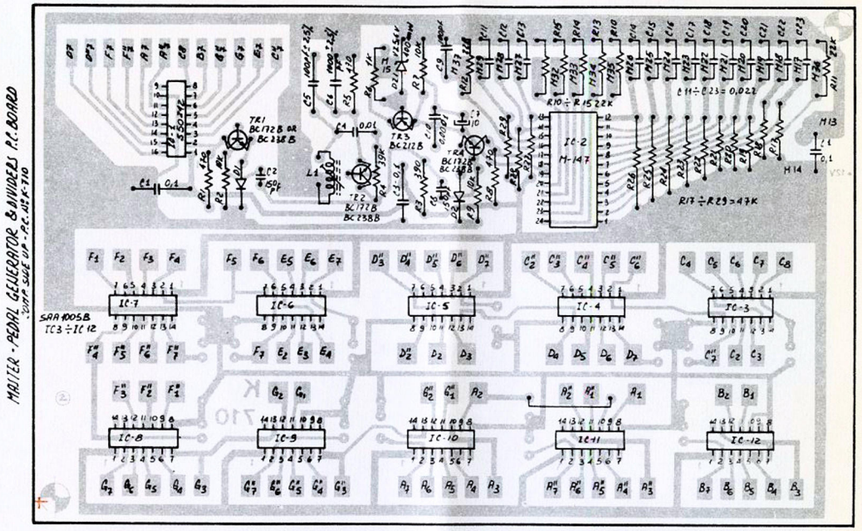

REVERB & PREAMPLIFIER - P.C. BOARD
COMPONENTS SIDE UP - P.C. MT K-713

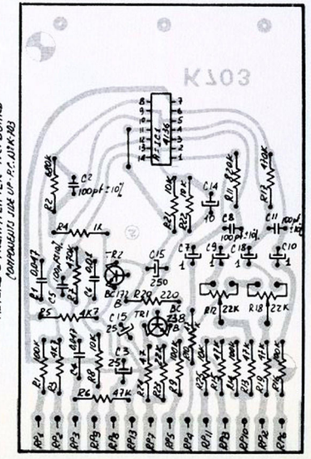

PEDAL FILTERS P.C. BOARD
COMP. SIDE UP - P.C. MT K-712

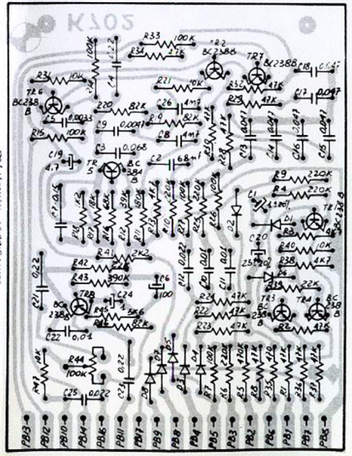

POWER & LESLIE AMPLIFIER TYPE -2
COMP. SIDE UP - P.C. MT K-724

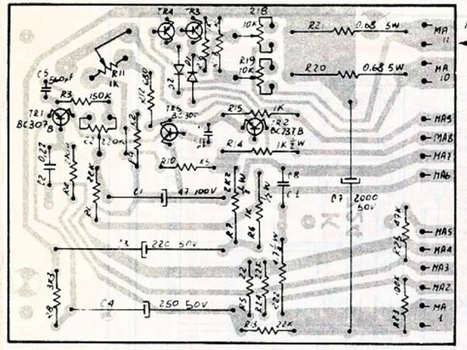

POWER SUPPLY P.C. BOARD
COMP. SIDE UP - P.C. MT K-714

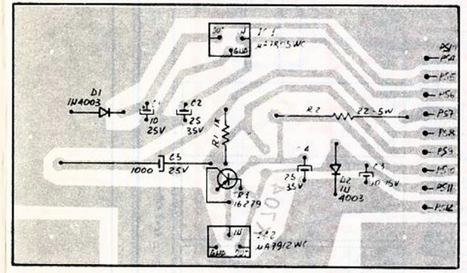

POWER SUPPLY P.C. BOARD
WITH COMP. SIDE UP P.C. MT K-715

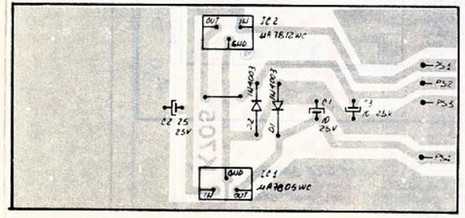

DRAWBARS P.C. BOARD
COMP. SIDE UP - P.C. MT K-709/1/2

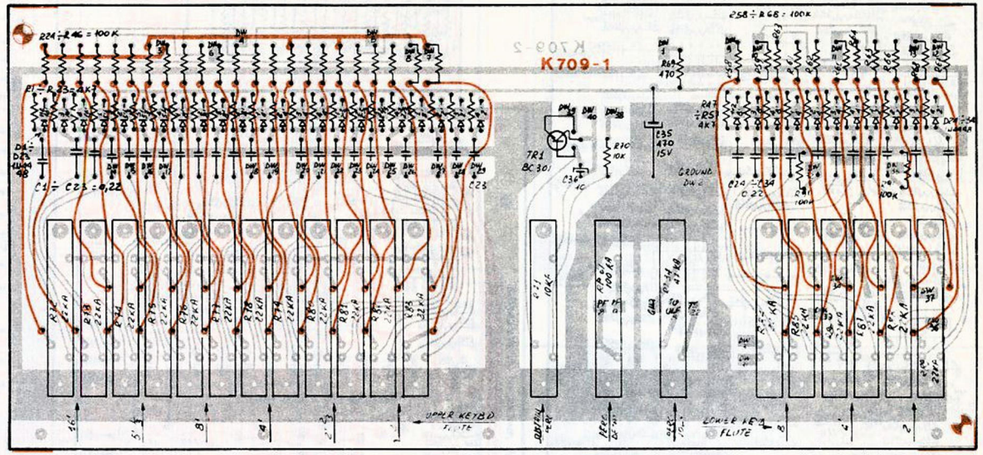

PEDAL DRAWBARS P.C. BOARD
COMP. SIDE UP P.C. MT K-708

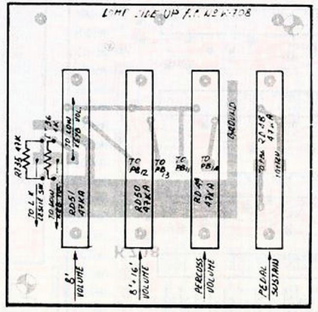

PRINTED CIRCUIT BOARDS
ORG. MOD. RAINBOW SYNTH'S
SHEET - 13
OF - 16

720

AUTOMATIC P.C. BOARD
COMP. SIDE UP - P.C. Nº K-577/1/2

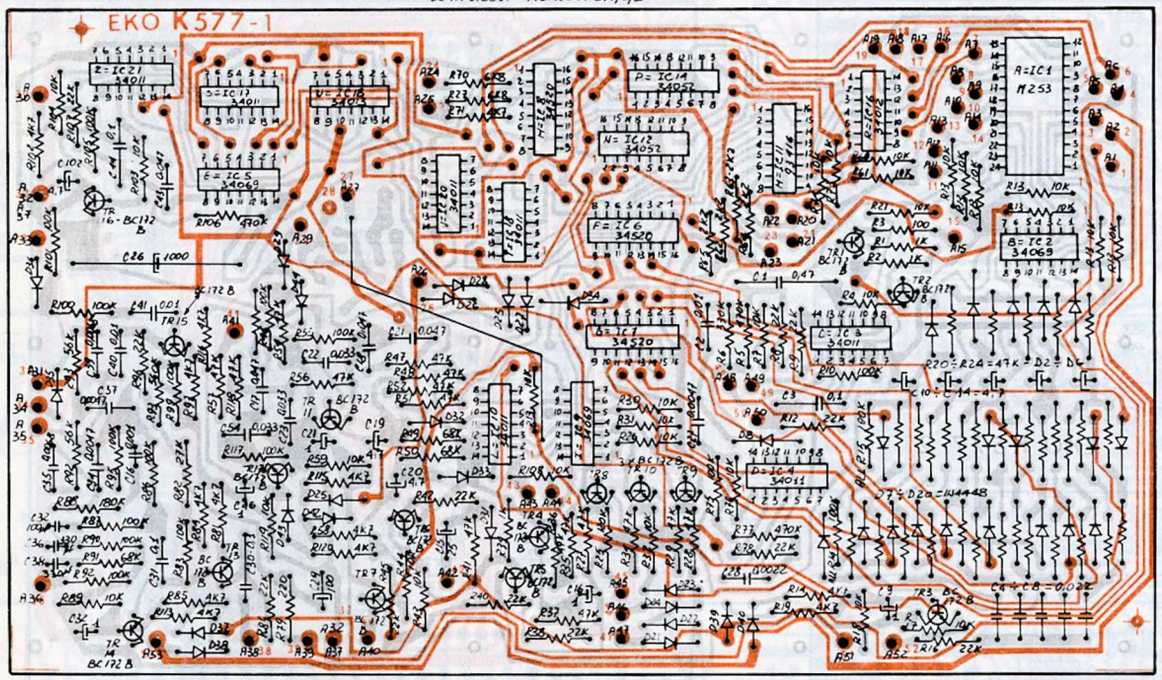

INSTRUMENTAL RHYTHM P.C. BOARD
COMP. SIDE UP - P.C. Nº K-571

RHYTHM SWITCHES P.C. BOARDS
SWITCHES IN-OFF-POSITION - P.C. Nº K-565 K-569

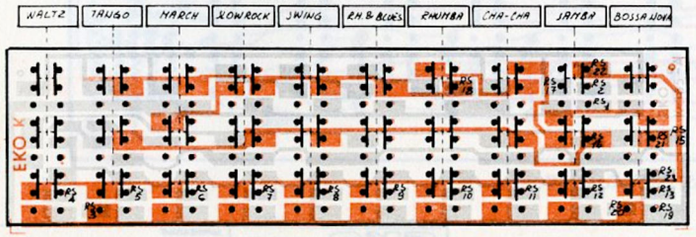

EFFECT SWITCHES - P.C. BOARD
SWITCHES IN-ON-POSITION - P.C. Nº K-572

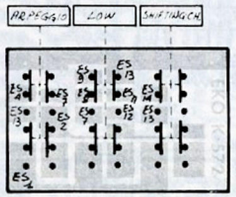

AUTOMATIC SWITCHES - P.C. BOARD
SWITCHES IN-OFF-POSITION P.C. Nº K-707

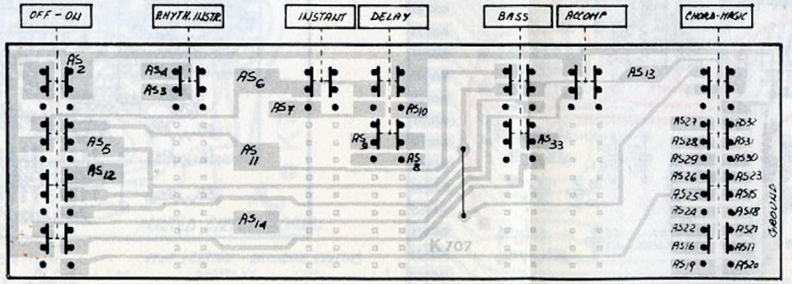

EKO RECANATI	DESIGN-MANUAL PRINTED CIRCUIT BOARDS
DISEGNATO	8/6/1978
CONTROLLO	23/6/1978
APPROVAZIONE	
MATERIALE	
TRATTAMENTO	
SCALA	SHEET - 14 of - 16
NUMERO	720

ADSR VCF - ADSR VCA - P.C. BOARD COMP. SIDE UP - P.C. N° K-719

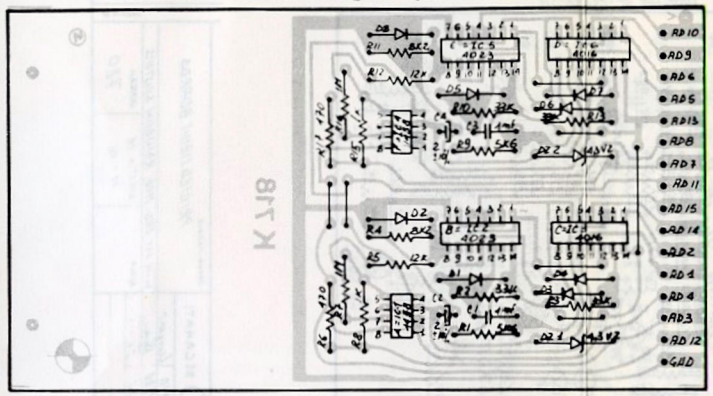

DIGITALLY CONTROLLED OSCILLATOR & WAVE SHAPING P.C. BOARD
COMPONENTS SIDE UP - P.C. N° K-721/1/2

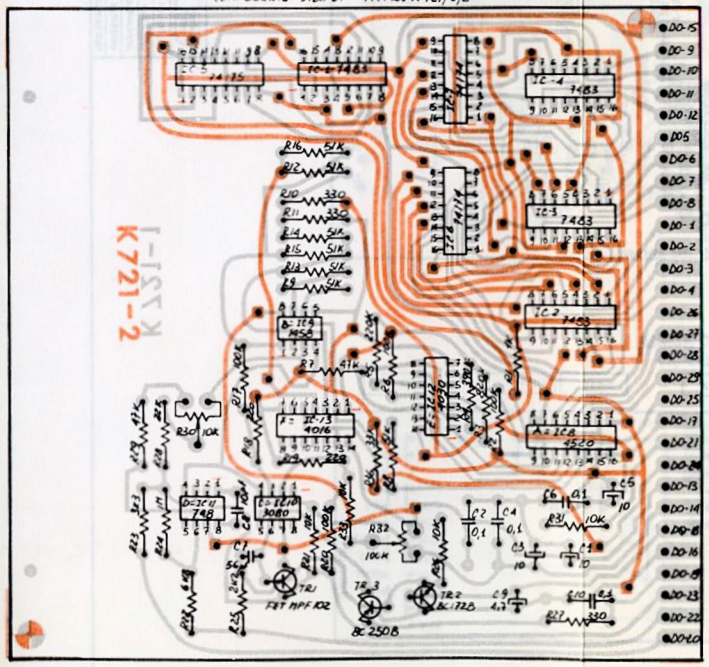

MASTER OSCILL. - LOW FREQ. - MODULATING OSCILL. - NOISE GEN. - WB. DELAY - COMP. SIDE UP - P.C. N° K-720

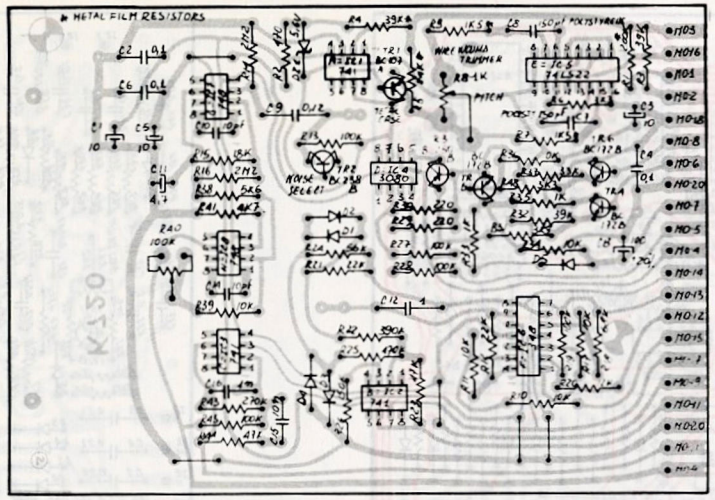

VOLTAGE CONTROLLED FILTER - VOLTAGE CONTR. AMPLIFIER P.C. BOARD
COMPONENTS SIDE UP - P.C. N° K-719

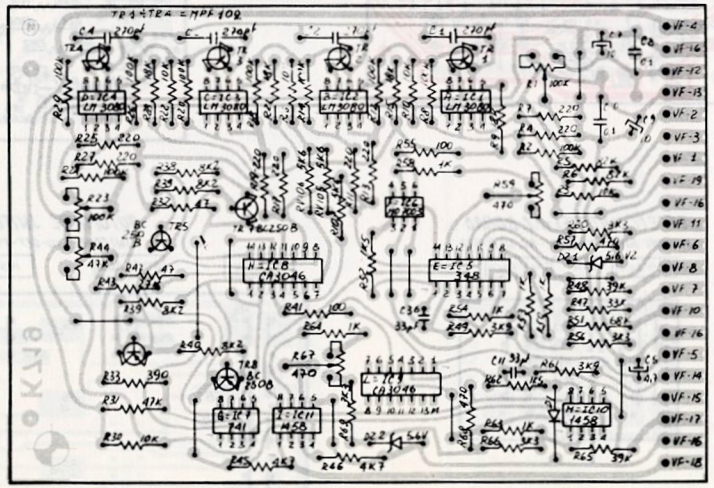

CODE CONVERSION - TRACING CONTROL & PORTAMENTO P.C. BOARD COMPONENTS SIDE UP

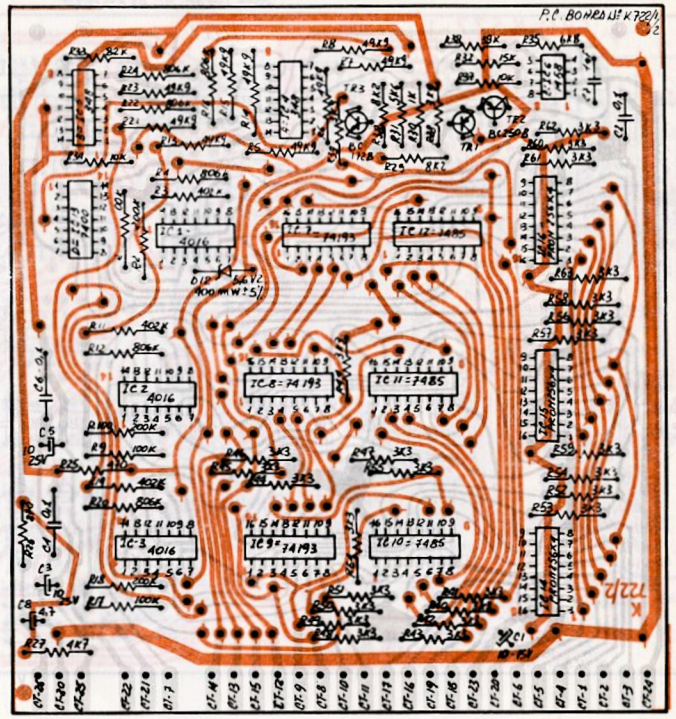

EKO RECANATI		SUBASSEMBLIES	PRINTED CIRCUIT BOARDS
DISEGNATO	14/6/1978	SUBASSEMBLY	SYNTH SECTION - RAINBOW SYNTHS
CONTROLLO	23/6/1978	SCALE	SHEET - 15 OF - 16
APPROVATO	4/7/78		NUMBER 720
MATERIALE			
TRATTAMENTO			

KEYBOARD ENCODER WITH MEMORY P.C. BOARD COMPONENTS SIDE UP P.C. K-723/1/2

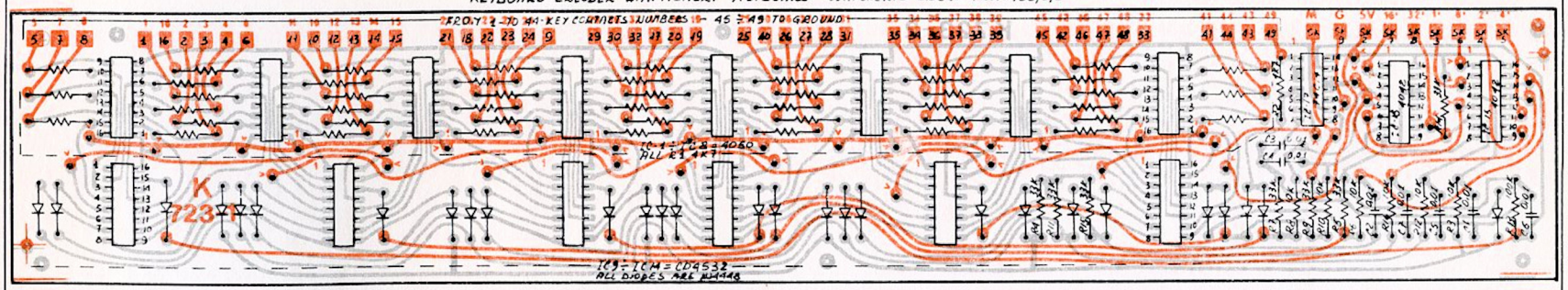

PRESET P.C. BOARD COMPONENTS SIDE UP P.C. BOARD Nº K-717/1/2

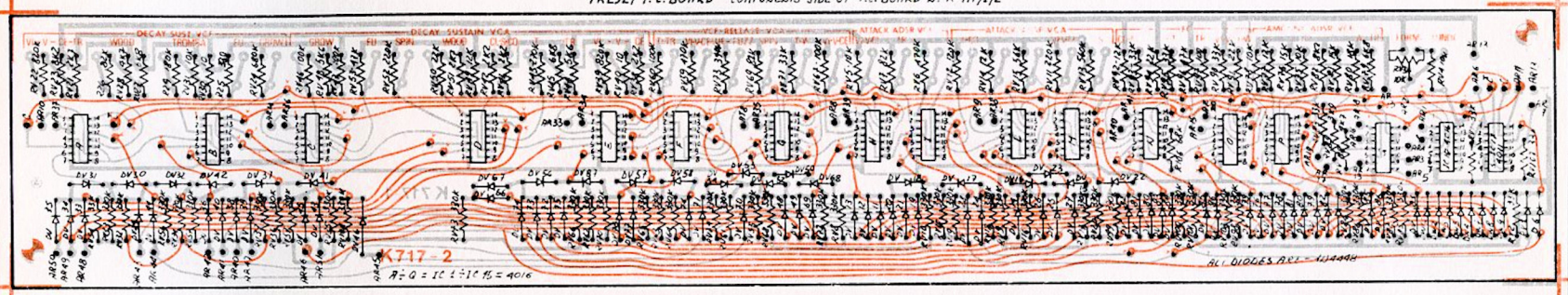

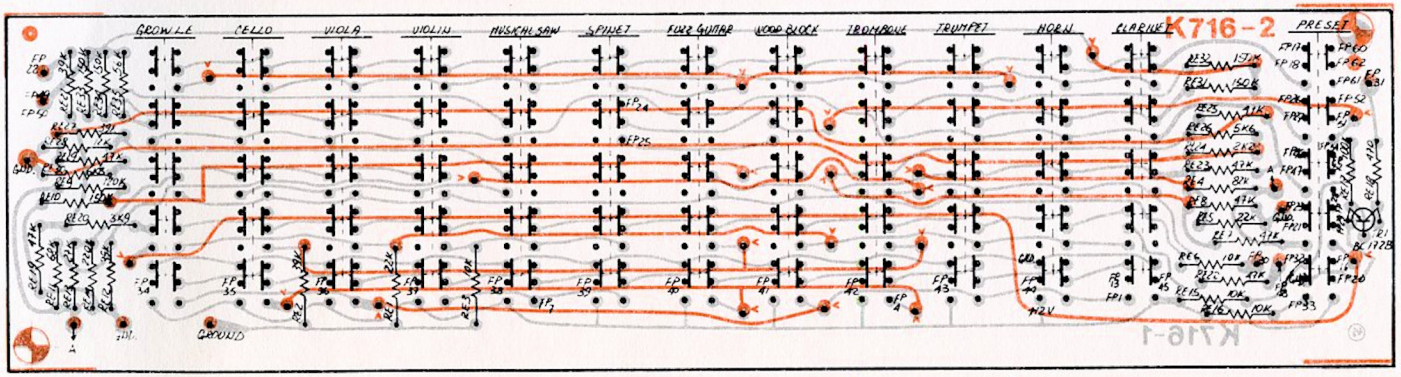

PRESET SWITCHES P.C. BOARD COMP. SIDE UP - P.C. Nº K-716/1/2

EKO RECANATI

19/6/1978 Cinsoro
23/6/1978 Bellaya
28/6/78 [illegible]

PRINTED CIRCUIT BOARDS

SYNT SECTION - RAINBOW SYNTHS

SHEET - 16 OF - 16

720